PREPLINE

USER MANUAL

IMMERSION BLENDER

MODEL: PIB500-12, PIB500-16, PIB500-20,

PIB750-12, PIB750-16, PIB750-20

USR BRANDS

USR Brands, Inc.

Phone: 800-764-1172 | www.usrestaurant.com | sales@usrestaurant.com

USRESTAURANT® RESERVES THE RIGHT TO CHANGE SPECIFICATIONS WITHOUT NOTICE

Keep these instructions with the appliance.
You should read this user manual carefully before using the appliance.

Dear Customer,

Thank you for purchasing this appliance. Please take a few minutes before starting operation of the appliance and read the following operating instructions.

1. Intended use

1.1 This machine is designed for food processing in restaurants, canteens and similar catering establishments.

1.2 The machine is not intended to process for meet which has bone, tough skin, shells or fish scales. Neither use this machine to cutter vegetable or fruit with nut or tough skin. Otherwise, it might lead to damage of the machine, property or personal injury.

1.3 The machine is intended for commercial and indoor use by trained and skilled personnel familiar with these instructions.

The assortment is made up of 3 different sizes:

The machine body is built in PA66+GF30% and stainless steel for easy cleaning and maintenance. It has safety features compliant with the applicable safety Directives.

2 Safety regulations ⚠

2.1 Safety regulations

2.1.1 This appliance is intended for commercial use only and must not be used for household use.

2.1.2 The appliance must only be used for the purpose for which it was intended and designed. The manufacturer is not liable for any damage caused by incorrect operation and improper use.

2.1.3 Keep the appliance and electrical plug away from water and any other liquids. In the event that the appliance should fall into water, immediately remove plug from the socket and do not use until the appliance has been checked by a certified technician. Failure to follow these instructions could cause a risk to lives.

2.1.4 Never attempt to open the casing of the appliance yourself.

2.1.5 Do not insert any objects in the casing of the appliance.

1.1.6 Do not touch the plug with wet or damp hands.

2.1.7 Danger of electric shock! Do not attempt to repair the appliance yourself. In case of malfunctions, repairs are to be conducted by qualified personnel only.

2.1.8 Never use a damaged appliance! Disconnect the appliance from the electrical outlet and contact the retailer if it is damaged.

2.1.9 Do not immerse the electrical parts of the appliance in water or other liquids. Never hold the appliance under running water.

2.1.10 Regularly check the power plug and cord for any damage. If the power plug or

power cord is damaged, it must be replaced by a service agent or similarly qualified persons in order to avoid danger or injury.

2.1.11 Make sure the cord does not come in contact with sharp or hot objects and keep it away from open fire. To pull the plug out of the socket, always pull on the plug and not on the cord.

2.1.12 Ensure that the cord (or extension cord) is positioned so that it will not cause a trip hazard.

2.1.13 Always keep an eye on the appliance when in use.

2.1.14 As long as the plug is in the socket the appliance is connected to the power source.

2.1.15 Turn off the appliance before pulling the plug out of the socket.

2.1.16 Never carry the appliance by the cord.

2.1.17 Do not use any extra devices that are not supplied along with the appliance.

2.1.18 Only connect the appliance to an electrical outlet with the voltage and frequency mentioned on the appliance label.

2.1.19 Connect the power plug to an easily accessible electrical outlet so that in case of emergency the appliance can be unplugged immediately. To completely switch off the appliance pull the power plug out of the electrical outlet.

2.1.20 Always turn the appliance off before disconnecting the plug.

2.1.21 Never use accessories other than those recommended by the manufacturer. Failure to do so could pose a safety risk to the user and could damage the appliance. Only use original parts and accessories.

2.1.22 This appliance is not intended for use by persons (including children) with reduced physical, sensory or mental capabilities, or lack of experience and knowledge.

2.1.23 This appliance must not be used by children under any circumstances.

2.1.24 Keep the appliance and its cord out of reach of children.

2.1.25 Always disconnect the appliance from the mains if it is left unattended or is not in use, and before assembly, disassembly or cleaning.

2.1.26 Never leave the appliance unattended during use.

2.2 Special Safety Regulations

2.2.1 The appliance is intended for commercial and indoor use by trained and skilled personnel familiar with these instructions.

2.2.2 This machine is designed for food processing in restaurants, canteens and similar catering establishments.

2.2.3 Any other use might lead to damage to the appliance or personal injury.

2.2.4 Do not place the appliance on a heating object (gasoline, electric, charcoal cooker, etc.) Keep the appliance away from any hot surfaces and open flames. Always operate the appliance on a level, stable, clean, heat-resistant and dry surface.

2.2.5 **Danger** of injury! Care is needed when operating or cleaning. Wear protective gloves (not supplied) if necessary.

2.2.6 **Caution!** Securely route the power cord if necessary, in order to prevent unintentional tripping over and falling.

2.2.7 Do not use the appliance before it is properly assembled.

2.2.8 This appliance is not intended to be operated by means of an external timer or separate remote-control system.

2.2.9 Never bypass any safety interlocks on the appliance.

2.2.10 **WARNING**: ALWAYS switch off the appliance and unplug from electrical power supply before cleaning, maintenance or storage.

2.2.11 **WARNING**: ALWAYS keep hands, long hair and clothing away from the moving parts.

2.2.12 **WARNING**: Take great care when handling the cutting blade. Wear protective gloves (not supplied) if necessary.

2.2.13 Allow at least 15cm spacing around the appliance for ventilation purpose during use.

2.2.14 Do not wash the appliance with water or waterjet. Washing with water can cause leakage and increase the risk of electric shock. No parts are dishwasher safe.

3 PRODUCT DESCRIPTION

3.1 Parts of description

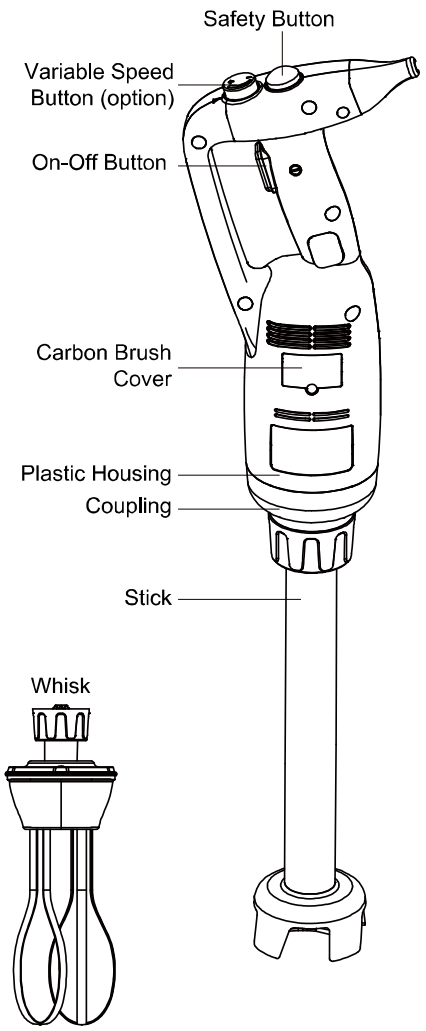

3.2 MAIN TECHNICAL PARAMETERS

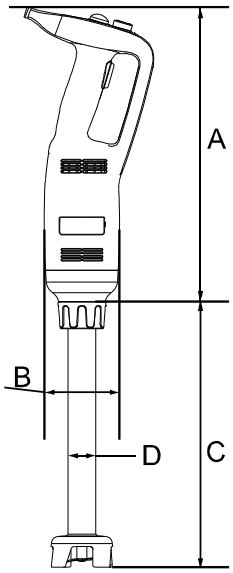

Model	Voltage Supply	Power	Speed	Net Weight	A (Length, mm)	B (Diameter, mm)	D Diameter
PIB500	100-120V ~ 60Hz	500W	4000~16000 RPM	5.07 lb.	373 mm	Ø 96 mm	Ø 35 mm
PIB750		750W	8000~20000 RPM	6.22 lb	396 mm	Ø 116mm	Ø 35 mm

4 INTRODUCTION

4.1 Preparation for first use

4.1.1 Check to make sure the appliance is undamaged. In case of any damage, contact your supplier immediately and do NOT use the appliance.

4.1.2 Remove all the packing material and protection film (if applicable). Keep the packaging for future storage.

4.1.3 Clean the appliance, see: **4.6 Cleaning**.

4.1.4 Place the food bowl or other container on a level and steady surface, unless mentioned otherwise. It is forbidden to put the machine above different objects from the working ground used in the food field of height included between 900 – 1100mm from the trampling level.

4.1.5 Position the appliance in such a way that the plug is accessible at all times.

4.1.6 Make sure the power outlet ratings correspond to the specifications printed on the

rating plate.

4.1.7 Make sure that the machine is connected to a grounding system if it's needed.

4.1.8 Even if safety systems are installed on the machine, prevent approaching moving parts with hands and do not touch the machine with wet or damp hands.

4.1.9 Warning! When the whisk is used, make sure to start appliance with low speed.

4.1.10 Warning! It is forbidden the use of the whisk in the machines with fixed speed.

4.1.11 Disconnect the machine's socket from the electric before carrying out any cleaning or maintenance operations.

4.1.12 Do not clean with high-pressure water jet.

4.1.13 It is strongly recommended that the operator contact the after sales center if there is any problem or malfunction occurred. Please do not dismantle the machine or in place of unauthorized parts.

Warning: This machine must be properly immersed and used in water. To avoid overheating or damage, DO NOT allow it to run in air for more than 10 seconds.

4.2 The manufacturer will be not responsible for following cases:

4.2.1 If the machine is tampered with or safety functions are installed by non-authorized staff.

4.2.2 If the components are replaced by unauthorized parts.

4.2.3 If the instruction in this manual is not carefully followed.

4.2.4 If the machine surfaces are treated with unsuitable substance or solvent.

4.3 Safety devices

4.3.1 **Safety Switch**: To make sure both hands are away from the blade while starting machine.

4.3.2 **Overcurrent protection switch** (Circuit breaker): The switch is designed to protect the electrical circuit from damage caused by excess current as a result of an overload or short circuit. The switch interrupts current flow after a fault is detected.

Note: To reset the machine, wait a few minutes till the motor cool down, then restart the machine.

4.4 INSTALLATION

4.4.1 Packing and unpacking

4.4.1.1 Remove all packaging materials. Keep the packaging for future storage.

4.4.1.2 After unpacking all accessories, read the manual carefully before installation.

4.4.1.3 Make sure the delivery contents are complete and free of any damage. If you find that parts are missing or show damage, do not use the appliance but contact your dealer.

4.4.2 STARTING AND STOPPING THE BLENDER

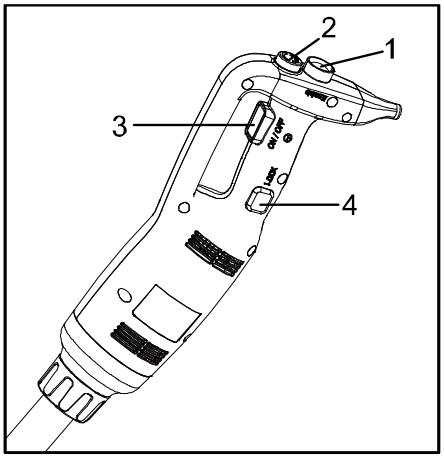

4.4.2.1 Check that the on-off button (No.3) is in the released position.

4.4.2.2 Connect the appliance to the power supply.

4.4.2.3 Insert the tube or whisk into the appliance.

4.4.2.4 Press and hold down the safety button (No.1) if the appliance has.

4.4.2.5 Press the on-off button (No.3), and the blender will start up. Now, release safety button (No.1).

4.4.2.6 To stop the blender, release the on-off button (No.3), then blender stop.

4.4.3 CONTINUOUS OPERATION:

Follow above steps 4.4.2.1 to 4.4.2.6 above, then:

4.4.3.1 While the on-off button (No.3) is in the depressed position, press the locking button (No.4).

4.4.3.2 Release the on-off button (No.3), and the appliance will function continuously.

To stop the appliance, press the on-off button (No.3) and release it.

4.4.4 VARIABLE-SPEED OPERATION

Follow above steps 4.4.2.1 to 4.4.2.6, then:

Change the speed of the motor by turning the variable speed button (No.2) towards the maximum or minimum as required. With the self-regulating speed system, once you have selected a speed, it will remain constant, even if the consistency of your mixture changes.

Warning: <u>It is strongly advisable to start a low speed when using the variable-speed blender!</u>

4.4.5 Working position:

4.4.5.1 Blender function: For better control, we recommend that you hold the bender by the handle and the bottom of the motor unit. Furthermore, we recommend that you tilt the bender at a slight angle to prevent the bell from touching the bottom of the container. Always make sure that the bell is sufficiently immersed to avoid splashing and that the air vents of the motor unit does not come into contact with any liquid. For optimum efficiency, two thirds of the tube should be immersed in preparation.

4.4.5.2 Whisk function: You can also hold the appliance by the handle with one hand, leaving the other hand free to hold the bowl, if necessary. While you process the preparation,

we recommend that you move the whisk around in the bowl, in order to ensure that the mixture is completely homogeneous. We strongly advise you to keep the whisk from touching the sides of the bowl. For Maximum efficiency, at least one-fifth of the whisk length should be immersed. But never immerse the whisk holder into the preparation.
Warning: It is strongly advisable to start a low speed when using the whisk!

4.5 ASSEMBLING / DISMANTLING:

The assembly / disassembly operations of every device of the appliance are performed with the appliance stop and with the plug disconnected from the socket.

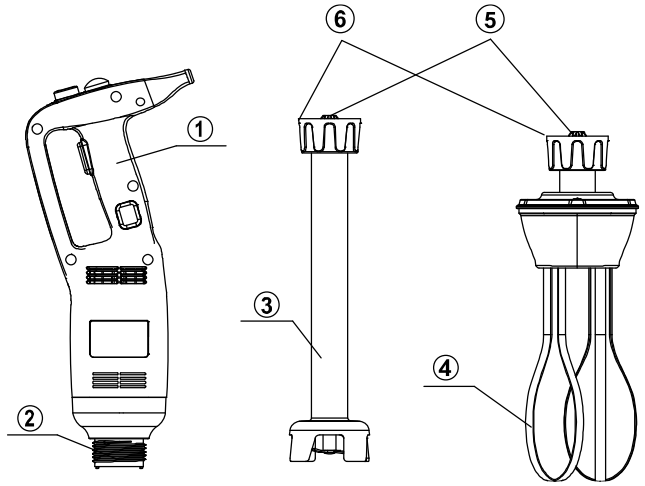

4.5.1 Assembly

1. Align and insert the coupling (5) of the tube (3) or whisk (4) in the clutch (2) of the machine body (1). Be sure the concave side of coupling must catch into the convex of the clutch.
2. Screw the nut (6) up to fasten them firmly to the machine body (1).

The disassembly activities perform following in a backgrounds way the assembly phases previously described.

4.6 CLEANING

As a precaution, always unplug your appliance before cleaning it.

4.6.1 After using the immersion blender and whisk in a hot preparation, cool the bottom of the tube in cold water before dismantling the bell from the tube. After completion of preparation, clean immediately to prevent food from sticking to surfaces.

4.6.2 Never put the motor unit and its handle in water, clean them with a damp cloth or a sponge.

4.6.3 Blender tube and bell cleaning: Place the tube and bell into a suitable container with water and switch on for a few seconds to clean the bell and tube.

WARNING: Always dry the blades thoroughly after cleaning to avoid spotting.

4.6.4 Never immerse the whisk holder in water, clean it with a slightly damp cloth or sponge.

4.6.5 It is vital to clean it thoroughly between each job using a detergent or disinfectant, but never use pure bleach. For plastic parts, do not use detergents that are too alkaline.

Warning 1: The blender tubes and whisks are not suitable for the dishwasher!

Warning 2: Blender tubes and whisk cannot be immersed thoroughly in water!

4.7 Storage

4.7.1 Before reassembling, make sure that all parts are dry. Before storing, remove all residues from the appliance and attachments, disconnect it from the supply and clean the appliance and its accessories thoroughly.

4.7.2 Store the appliance in a dry, protected environment at room temperature and out of the reach of children.

4.7.3 We recommend to put the appliance and attachments onto “wall hanger” for dry and safe storage.

4.8 Troubleshooting

4.8.1 If it is due to a power cut if the appliance had been unplugged, release the on-off button (No.3), check the power supply and then restart the appliance.

4.8.2 If it is due to overheating of the machine, release the on-off button (No.3), and then unplug the appliance, wait a few minutes for the motor to cool down and the thermal safety mechanism to be reset, and then restart the appliance.

4.8.3 If you cannot locate the cause of the problem: release the on-off button, unplug the appliance, check below:

1. the plug.
2. that the blades are free to rotate in the bell, be careful the blade is very sharp.
3. that state of the power cord.
4. the drive shaft is free to rotate. To do this, remove the bell and test the rotation of the end of drive shaft manually.

If a malfunction occurs which is not on our list of possible faults, consult your retailer or return the appliance to the after-sales services.

5 Circuit diagram

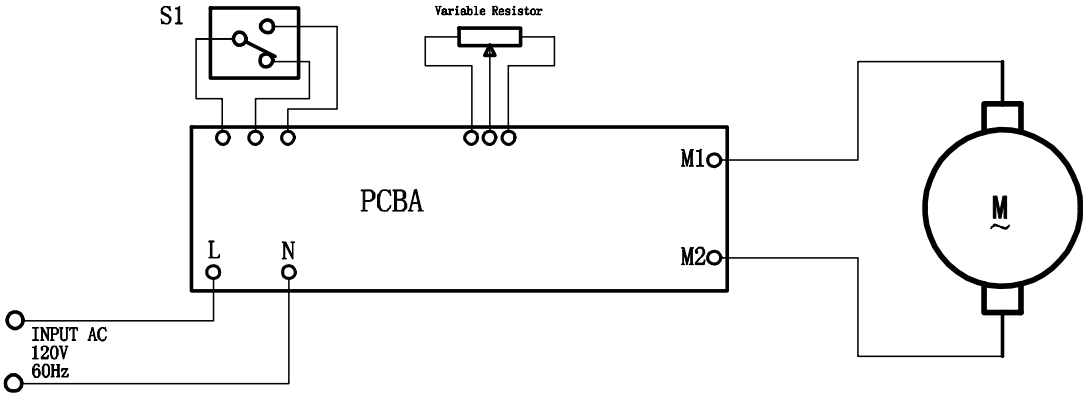

6 Exploded view and spare parts lists

MODEL: PIB500

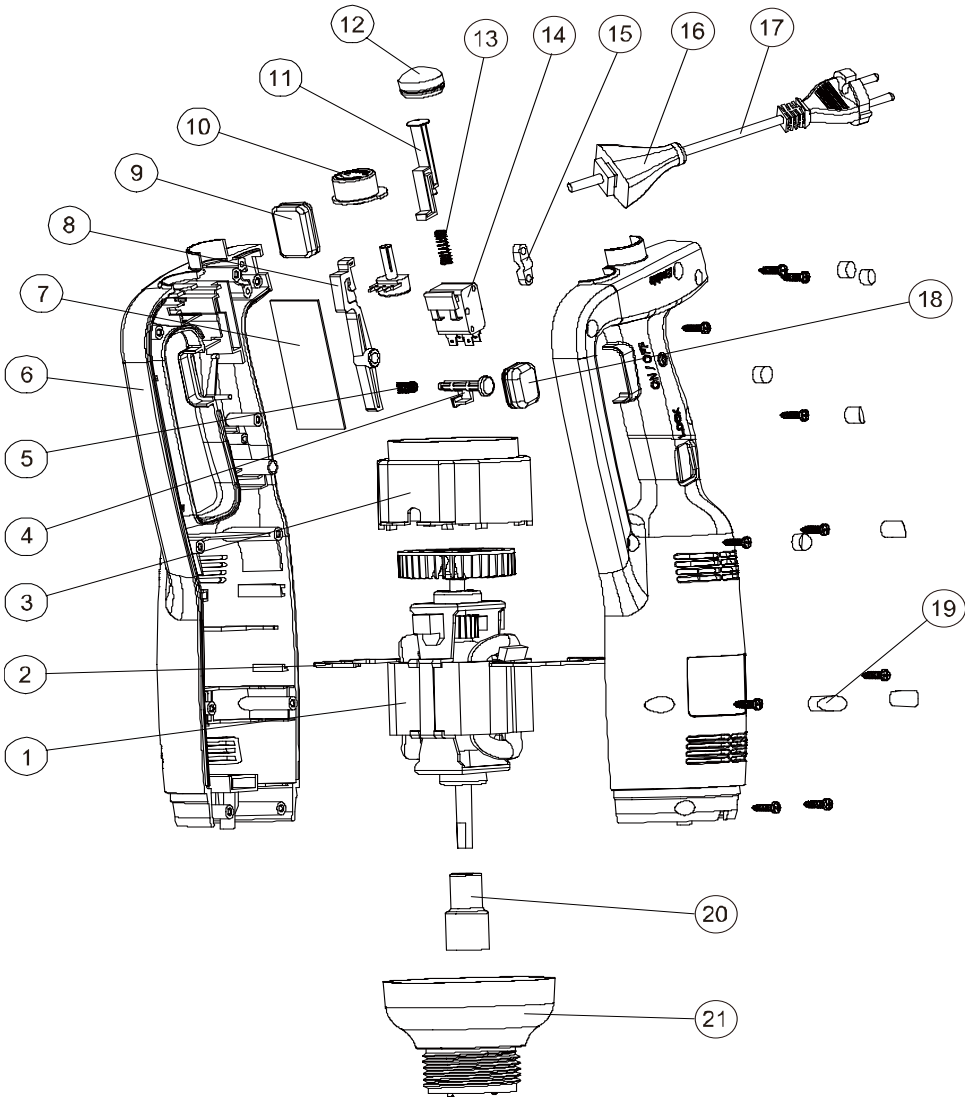

No.	Name	No.	Name
1	Motor	12	Rubber push sheath
2	Air deflector	13	Interlocking push bolt Spring
3	Motor cover	14	Switch
4	Interlocking push bolt	15	Pressing board
5	Interlocking push bolt Spring	16	Cable sheath
6	Housing	17	Power cord
7	Speed control board	18	Rubber interlocking protector
8	Switch osculant staff	19	Screw plunger
9	Switch sheath	20	Spline sleeve
10	Speed control key/cover	21	Aluminium head
11	Interlocking push bolt		

MODEL: PIB750

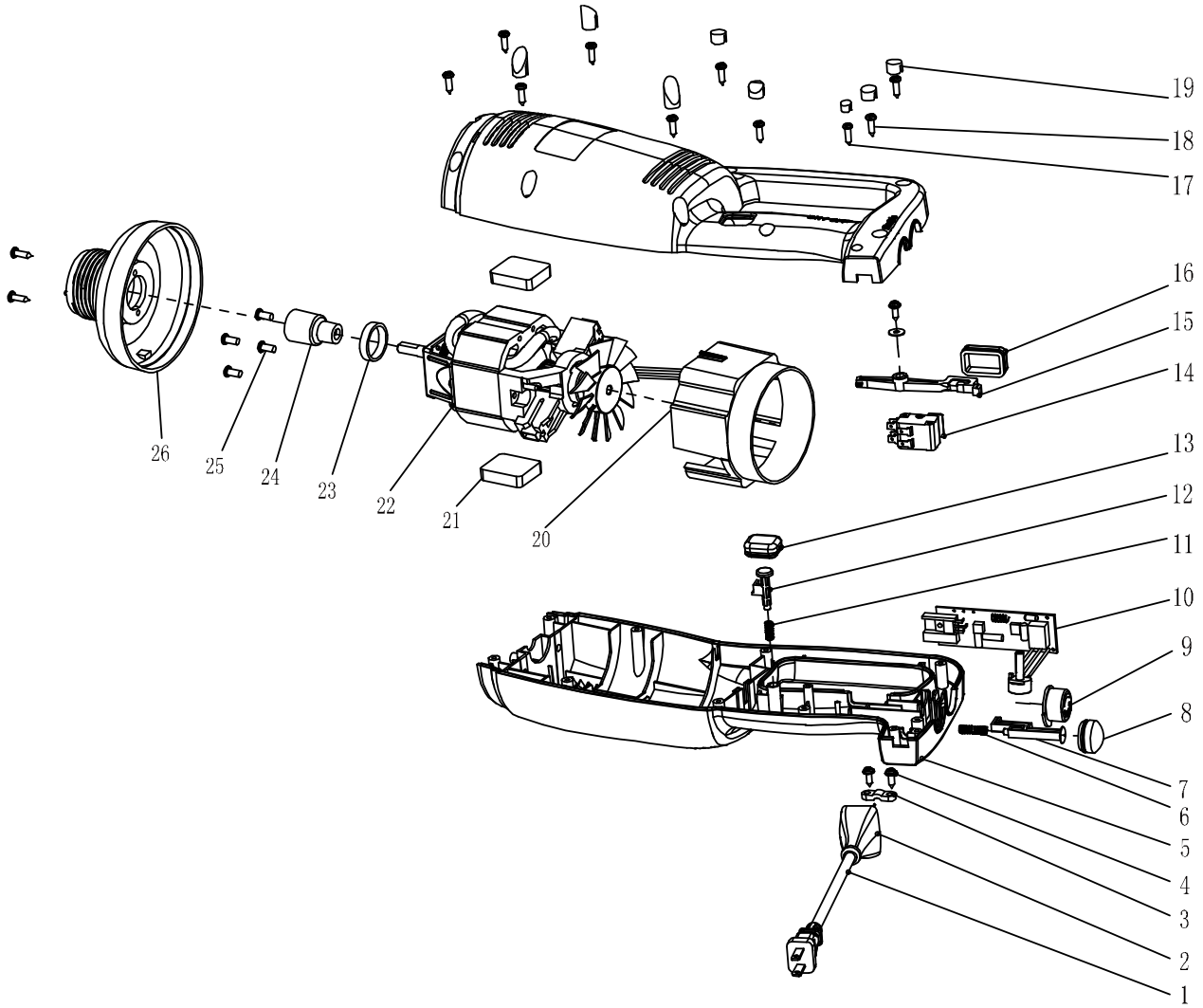

spare parts lists

No.	Name	No.	Name	No.	Name
1	Power cord with tail	10	Speed control board	19	Screw plunger
2	Cable sheath	11	Interlocking push bolt Spring	20	Motor cover
3	Pressing board	12	Interlocking push bolt	21	Motor gasket
4	Pressing board screw	13	Rubber interlocking protector	22	Motor
5	Housing	14	Switch	23	Rubber ring
6	Push bolt spring	15	Switch osculant staff	24	Spline sleeve
7	Push bolt	16	Switch sheath	25	Screw
8	Rubber push sheath	17	Screw	26	Aluminium head
9	Speed control key	18	Screw		

MODEL: PIB-STCK-12 PIB-STCK-16 PIB-STCK-20

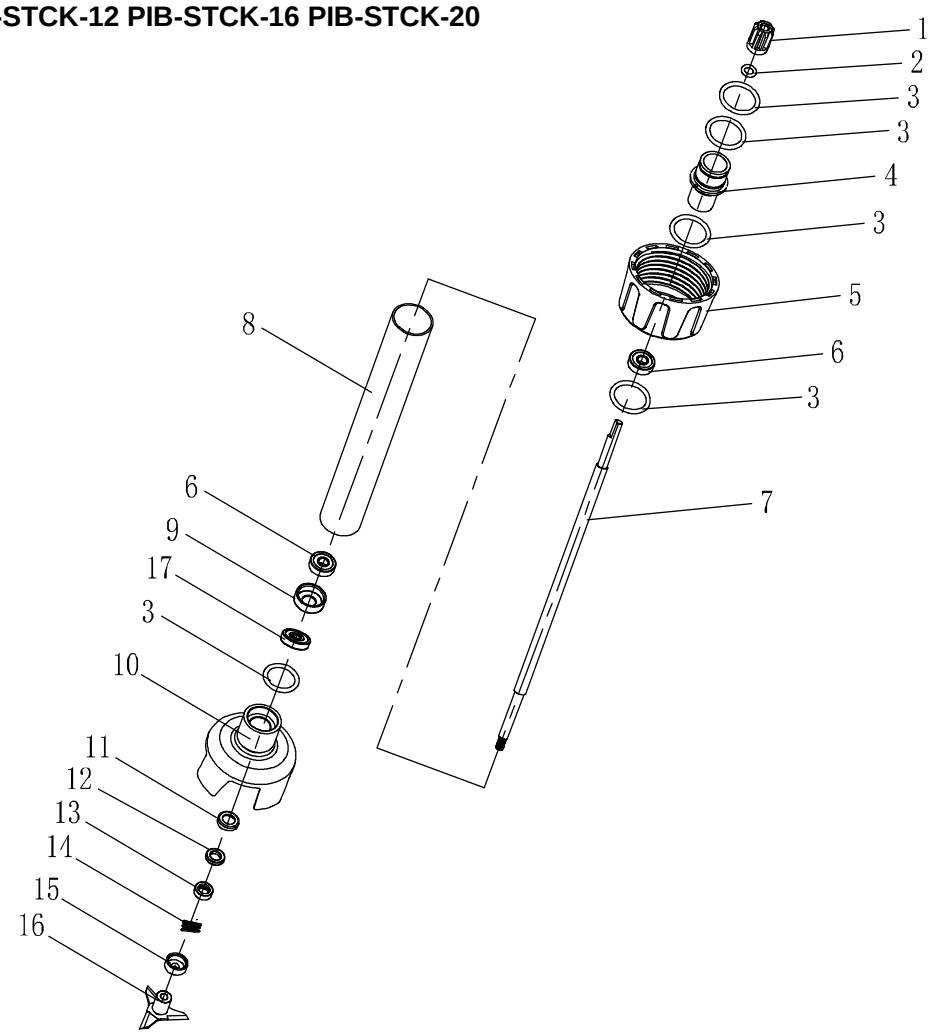

No.	Name	No.	Name	No.	Name
1	Spline	7	Output axis	13	Graphite ring
2	Spline seal ring	8	304 S/S tube	14	Graphite ring spring
3	Connect sleeve seal ring	9	Bearing sleeve	15	Convex ring
4	Connect sleeve	10	Knife protector	16	Smooth blade
5	Fastening sleeve	11	Ceramic ring sleeve	17	Oil Sealing
6	608 Bearing	12	Ceramic ring		

MODEL: PWIK10

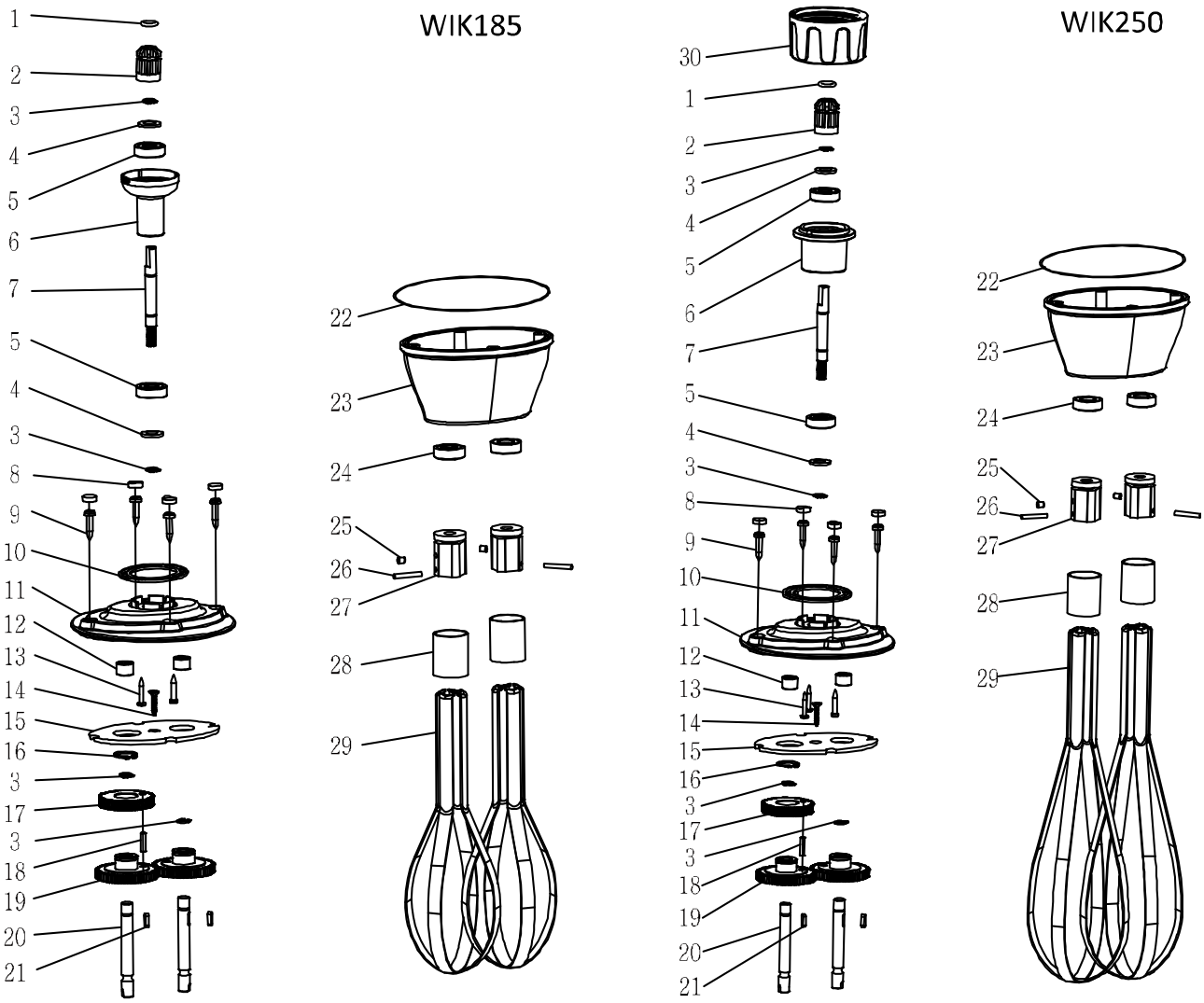

SPARE PARTS LISTS

No.	Name	No.	Name	No.	Name
1	Silicone rubber ring	11	Upper cover	21	Key
2	Spline	12	Needle bearing	22	Down seal ring
3	Φ8 Snap ring	13	Screw	23	Shaft sleeve
4	Bearing washer	14	Screw		Lower cover
5	Bearing	15	Baffle plate	24	Oil sealing
6	Connect sleeve	16	Φ16 Snap ring	25	Set screw
7	Helical gear bearing	17	Helical gear bearing	26	Cylindrical pin
8	Screw plunger	18	Cylindrical pin	27	Fixed board
9	Housing screw	19	Straight gear	28	Steel ring
10	Up seal ring	20	Output axis	29	Steel bar